TA90E Micro BLDC Pump

CE | RoHS | REACH | NSF | WRAS

TA90E



Typical Applications

- Liquid cooled EV charging stations
- Servers cooling
- Chiller
- Thermal management
- Laser cooling
- Medical cooling

Features

- 130L high-flow for rapid cooling
- Maximum pressure 3Bar, efficient working point 51L@23M
- Intelligent frequency conversion control
- Extreme low temperature cold starting at -40°C, stable flow
- 20,000 hours long lifetime

Specification

Model	Product Code	Rated Voltage (VDC)	Max Water Flow (L/min)	Max Water Head (M)	Rated Current (A)	Rated Power (W)	Efficient Working point (L/min @ M)
TA90E	TA90E-A48-13030	48	130	30	8.3	400	51 @ 23
Customization: 1. /PWM speed control 2. /FG (RPM) signal wire							

- The data in the table is the measured performance when pure water is delivered at normal temperature.
- The maximum flow rate is the flow rate when water head is 0 meter, and the highest lift is the lift when water flow is 0 L/min.
- Noise≤60dB(A)
- Working mode: Continuous
- IP level: IP67
- Coil Insulation class: Class F
- Ambient temperature: -40℃ ~55℃
- Liquid temperature: -40℃ ~80℃
- Pumps must be in a continuous flooded suction environment.
- Do Not Run Pumps Dry.

Curve

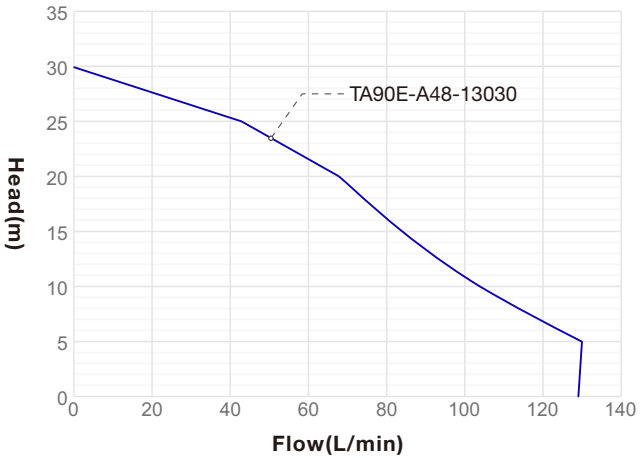

Dimension (mm)

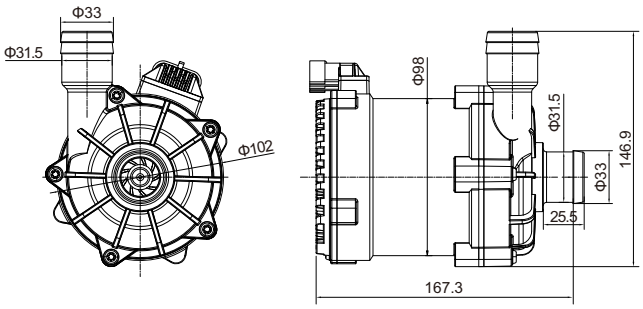

TOPSFLO
Excellence in Micro Pump,DC Pump

TOPS Industry and Technology (Micro Pump & Motor) Co.,Ltd
E-mail:info@topsflo.com Web:www.topsflo.com
Phone:86-731-82739266 Wechat/Whatsapp: +86-19376691419

Whatsapp Wechat